ORH interface
ion module
Collimat
BEAM MOTION
Nozzle module

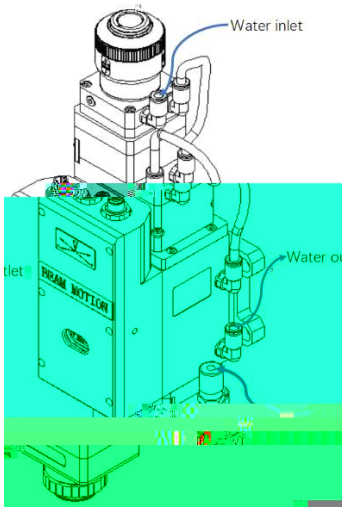
Water inlet
Water o
let
BEAM MOTION

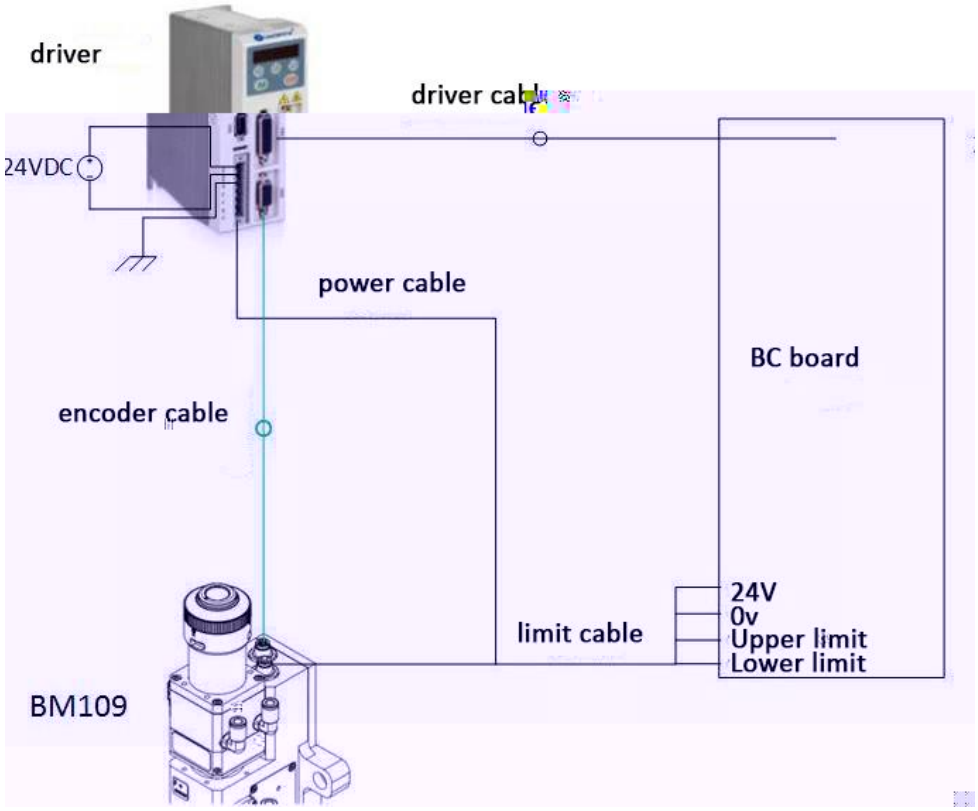
driver
driver cable
24VDC
power cable
BC board
encoder cable
24V
0v
Upper limit
Lower limit
limit cable
BM109

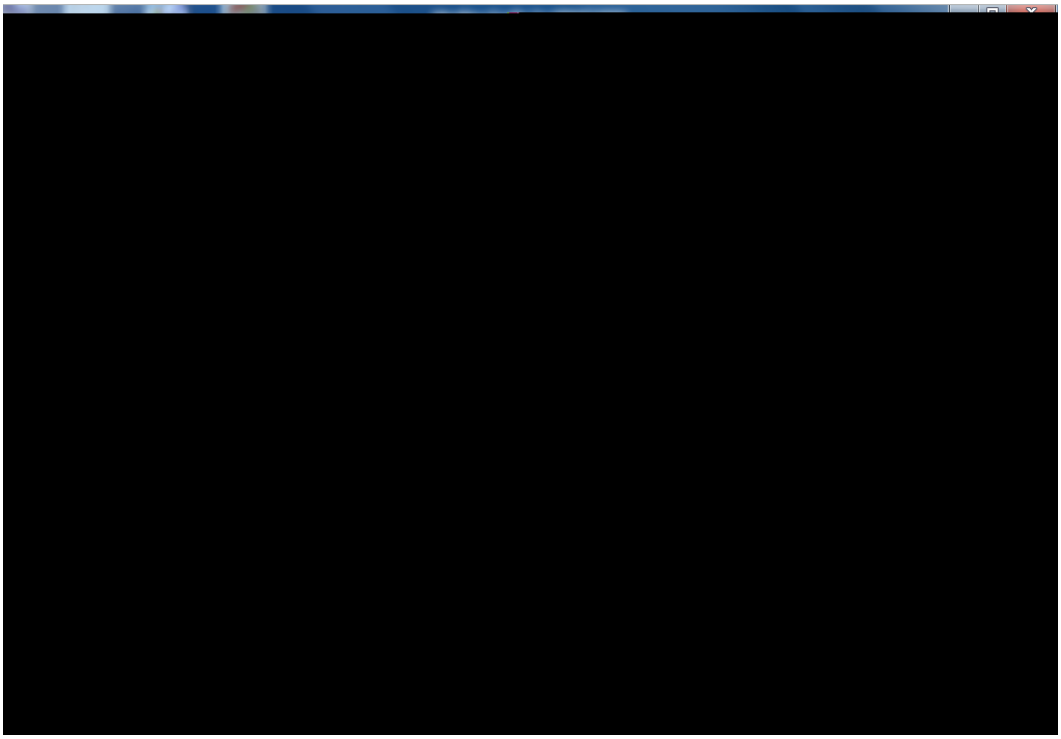

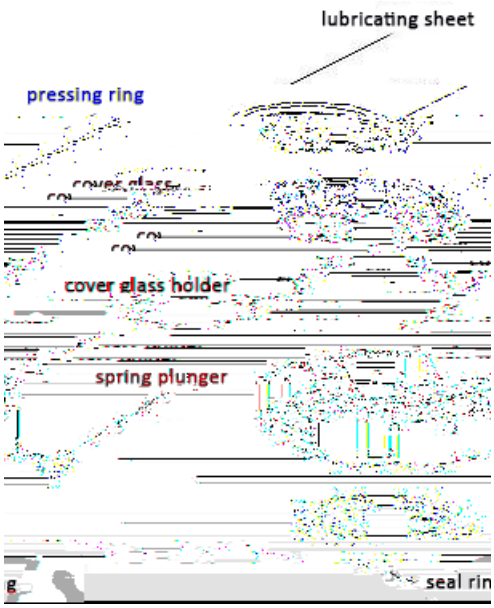
lubricating sheet
pressing ring
cover glass
cover glass holder
spring plunger
seal rin

Collimation Length	QBH-100mm	QBH-75mm
	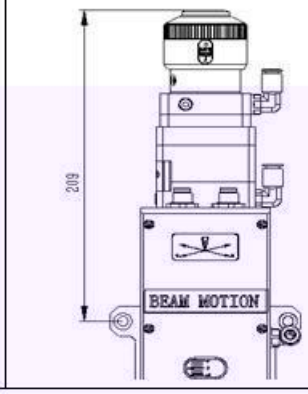	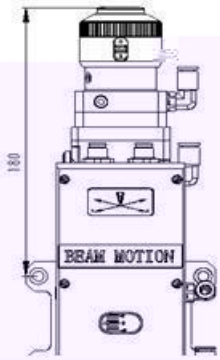
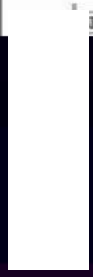
	125mm.FL	155mm.FL	200mm.FL